NAMA PEMILIK PROYEK : **PT PERTAMINA EP**

NAMA PROYEK : **JASA PEMBANGUNAN FASILITAS PRODUKSI STASIUN PENGUMPUL (SP) TANJUNG MIRING BARAT & KARANGAN TIMUR**

LOKASI : **SP TANJUNG MIRING BARAT & KARANG TIMUR - FIELD LIMAU**

NO. KONTRAK : **SA02035383B**

REV.	TGL.	DESKRIPSI	DISIAPKAN	DIPERIKSA	DISETUJUI	DIPERIKSA	DISETUJUI
A	22-12-25	Issued For Review	FA	AS	RTN		
			PT. PROSYMPAC OIL & GAS			PT. PERTAMINA EP	

TABEL REVISI

Rev.	Tanggal	Deskripsi

COMMENT RESPONSE SHEET

No.	Page	Company's Comment	Contractor's Response	Remarks

	JASA PEMBANGUNAN FASILITAS PRODUKSI STASIUN PENGUMPUL (SP) TANJUNG MIRING BARAT & KARANGAN TIMUR	**Doc. No:** TMBP-SP001-PS-DST- D102
		#REF! of #REF!
		Date: 22-Dec-2025

DATASHEET FOR FOAM SYSTEM

	1. General					
1	Area/Equipment	:	Firewater			
2	Type	:	Foam Bladder Tank (Note 4)			
3	P&ID No	:	TMBP - SP001 - PS - PID - D101			
4	Manufacture	:	VTA			
	Location	:	Outdoor			
5	Quantity	:	1			
	2. Design Condition					
6	Dimension (ID X L), in	:	30" ID x 104" L, See drawing & dimension (VTA)			
7	Max Working Pressure	:	VTA barg	Foam Concentrate	:	200 gallon
	Foam Agent	:	3 % AFFF	Storage Capacity	:	200 gallon
8	Design Temperature	:	VTA	Design Pressure	:	VTA psig
	3. Connection					
9	Induction Rate	:	Foam AFFF 3%	Check Valve 2" (material)	:	Stainless Steel 304
10	Pressure Gauge Inlet 1/4 "	:	0 to 300 psi	Water Inlet Line (material)	:	VTA
	Level Glass	:	as per manufacture standard	Foam Condensate Line 2" (materia)	:	VTA
11	Accessories	:	Lifting Lug			
	4. Finish					
12	Body (Material	:	Carbon Steel (ASME Section VIII Division 1)			
	5. Others					
13	Name Plate	:	Foam Bladder Tank			
14	Color	:	RED RAL 3000			
	5. Test & Inspection					
15	Performance Test	:	Yes	Hydrotest	:	To be stated regularly as per regulation
16	Empty Weight, kg	:	VTA	Others	:	-

DRAWING

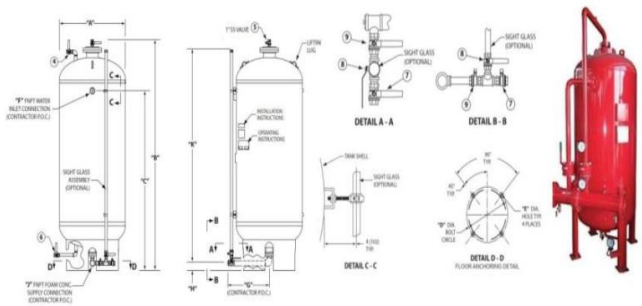

DIMENSION

Capacity gal. (litres)	A inch (mm)	B inch (mm)	C inch (mm)	D inch (mm)	E inch (mm)	F inch (mm)	G inch (mm)	H inch (mm)	J inch (mm)	K inch (mm)	Empthy Weight lb (kg)
200 (757)	30 (762)	104 (2642)	77 (1956)	27-3/4 (705)	9/16 (14)	2 (51)	20-1/4 (514)	4 (102)	2 (51)	91 (2311)	757 (343)

Remarks

VTA : Vendor to Advice

Note :
1. The foam system assembly shall be as per NFPA 11
2. Vendor shall provide a list of recommendation spare parts for two (2) years of operation and maintenance
3. Vendor shall provide Foam Chamber with 5 years product warranty
4. FAT & SAT Required
5. Vendor shall provide foam concentrate for SAT/Commissioning.
   Result of the SAT shall be laboratory clarification with 3% of foam concentrate.
6. The AFFF Foam agent for first filling and testing requirement is part of vendor scope

	JASA PEMBANGUNAN FASILITAS PRODUKSI STASIUN PENGUMPUL (SP) TANJUNG MIRING BARAT & KARANGAN TIMUR	**Doc. No:** TMBP-SP001-PS-DST- D102
		#REF! of #REF!
		Date: 22-Dec-2025

DATASHEET FOR FOAM SYSTEM

	1. General							
1	Area/Equipment	:	Storage Tank T-005 A					
2	Type	:	Type II Discharge Outlet based on NFPA 11					
3	P&ID No	:	TMBP - SP001 - PS - PID - D101					
4	Manufacture	:	VTA					
	Location	:	Outdoor					
5	Quantity	:	1					
	2. Design Condition							
6	Calculated Flowrate	:	86.87	gpm	Actual Flowrate	:	(Note 5)	
7	Inlet Pressure	:	7	barg	Foam Concentrate	:	3	%
8	Foam Agent	:	AFFF		Maximum Design Flowrate	:	187	gpm
	3. Connection							
9	Inlet	:	2.5	inch (Note 5)	Outlet	:	4	inch (Note 5)
10	Flange Connection	:	ANSI B16.5 Class 150#		Bolts (Material)	:	Stainless Steel Captive Bolts	
11	Nuts (Material)	:	Stainless Steel Captive Nuts					
	4. Finish							
12	Body (Material	:	Carbon Steel with Corrosion Resistant Paint					
	5. Others							
13	Features	:	Vapor Seal (Gas Stop)					
14		:	Test Cover (Test Plug for Testing)					
	5. Test & Inspection							
15	Dimension	:	Yes					
16	Empty Weight	:	VTA					

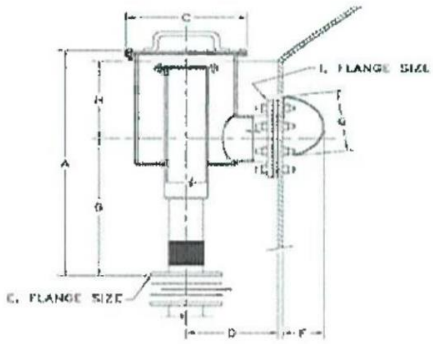

Remarks

VTA : Vendor to Advice

Note :
1. The foam system assembly shall be as per NFPA 11
2. Vendor shall provide a list of recommendation spare parts for two (2) years of operation and maintenance
3. Vendor shall provide Foam Chamber with 5 years product warranty
4. Vendor shall provide Gasket
5. As per minimum capacity of the selected size of Foam Chamber

POG	**JASA PEMBANGUNAN FASILITAS PRODUKSI STASIUN PENGUMPUL (SP) TANJUNG MIRING BARAT & KARANGAN TIMUR**	Doc. No: TMBP-SP001-PS-DST- D102
		#REF! of #REF!
		Date: 22-Dec-2025

DATASHEET FOR FOAM SYSTEM

	1. General'						
1	Area/Equipment	:	Storage Tank T-005 B				
2	Type	:	Type II Discharge Outlet based on NFPA 11				
3	P&ID No	:	TMBP - SP001 - PS - PID - D101				
4	Manufacture	:	VTA				
	Location	:	Outdoor				
5	Quantity	:	1				
	2. Design Condition						
6	Calculated Flowrate	:	86.87	gpm	Actual Flowrate	:	(Note 5)
7	Inlet Pressure	:	7	barg	Foam Concentrate	:	3 %
8	Foam Agent	:	AFFF		Maximum Design Flowrate	:	187 gpm
	3. Connection						
9	Inlet	:	2.5	inch (Note 5)	Outlet	:	4 inch (Note 5)
10	Flange Connection	:	ANSI B16.5 Class 150#		Bolts (Material)	:	Stainless Steel Captive Bolts
11	Nuts (Material)	:	Stainless Steel Captive Nuts				
	4. Finish						
12	Body (Material	:	Carbon Steel with Corrosion Resistant Paint				
	5. Others						
13	Features	:	Vapor Seal (Gas Stop)				
14		:	Test Cover (Test Plug for Testing)				
	5. Test & Inspection						
15	Dimension	:	Yes				
16	Empty Weight	:	VTA				

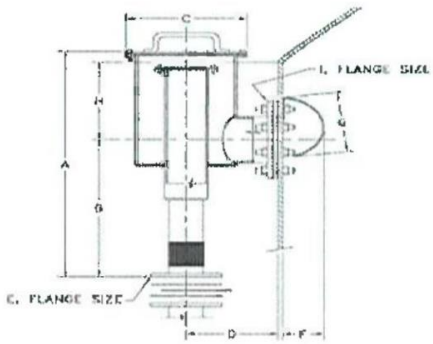

Remarks

VTA : Vendor to Advice

Note :
1. The foam system assembly shall be as per NFPA 11
2. Vendor shall provide a list of recommendation spare parts for two (2) years of operation and maintenance
3. Vendor shall provide Foam Chamber with 5 years product warranty
4. Vendor shall provide Gasket
5. As per minimum capacity of the selected size of Foam Chamber

	JASA PEMBANGUNAN FASILITAS PRODUKSI STASIUN PENGUMPUL (SP) TANJUNG MIRING BARAT & KARANGAN TIMUR	**Doc. No:** TMBP-SP001-PS-DST- D102
		#REF! of #REF!
		Date: 22-Dec-2025

Sebuah gambar berisi Grafis, logo, Font, teks, grafis
Deskripsi dibuat secara otomatis

DATASHEET FOR FOAM SYSTEM

	1. General'						
1	Area/Equipment	:	Storage Tank T-006 A				
2	Type	:	Type II Discharge Outlet based on NFPA 11				
3	P&ID No	:	TMBP - SP001 - PS - PID - D101				
4	Manufacture	:	VTA				
	Location	:	Outdoor				
5	Quantity	:	1				
	2. Design Condition						
6	Calculated Flowrate	:	203.3	gpm	Actual Flowrate	:	(Note 5)
7	Inlet Pressure	:	7	barg	Foam Concentrate	:	3 %
8	Foam Agent	:	AFFF		Maximum Design Flowrate	:	187 gpm
	3. Connection						
9	Inlet	:	2.5	inch (Note 5)	Outlet	:	4 inch (Note 5)
10	Flange Connection	:	ANSI B16.5 Class 150#		Bolts (Material)	:	Stainless Steel Captive Bolts
11	Nuts (Material)	:	Stainless Steel Captive Nuts				
	4. Finish						
12	Body (Material	:	Carbon Steel with Corrosion Resistant Paint				
	5. Others						
13	Features	:	Vapor Seal (Gas Stop)				
14		:	Test Cover (Test Plug for Testing)				
	5. Test & Inspection						
15	Dimension	:	Yes				
16	Empty Weight	:	VTA				

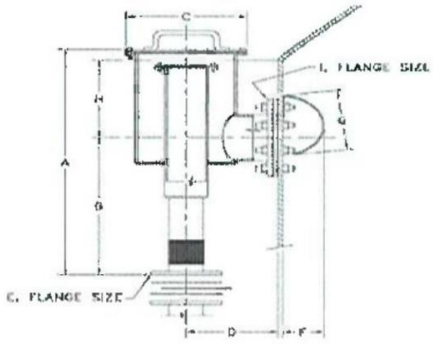

Remarks

VTA : Vendor to Advice

Note :
1. The foam system assembly shall be as per NFPA 11
2. Vendor shall provide a list of recommendation spare parts for two (2) years of operation and maintenance
3. Vendor shall provide Foam Chamber with 5 years product warranty
4. Vendor shall provide Gasket
5. As per minimum capacity of the selected size of Foam Chamber

POG	**JASA PEMBANGUNAN FASILITAS PRODUKSI STASIUN PENGUMPUL (SP) TANJUNG MIRING BARAT & KARANGAN TIMUR**	**Doc. No:** TMBP-SP001-PS-DST- D102
		#REF! of #REF!
		Date: 22-Dec-2025

DATASHEET FOR FOAM SYSTEM

	1. General'						
1	Area/Equipment	:	Storage Tank T-006 B				
2	Type	:	Type II Discharge Outlet based on NFPA 11				
3	P&ID No	:	TMBP - SP001 - PS - PID - D101				
4	Manufacture	:	VTA				
	Location	:	Outdoor				
5	Quantity	:	1				
	2. Design Condition						
6	Calculated Flowrate	:	198.8	gpm	Actual Flowrate	:	(Note 5)
7	Inlet Pressure	:	7	barg	Foam Concentrate	:	3 %
8	Foam Agent	:	AFFF		Maximum Design Flowrate	:	187 gpm
	3. Connection						
9	Inlet	:	2.5	inch (Note 5)	Outlet	:	4 inch (Note 5)
10	Flange Connection	:	ANSI B16.5 Class 150#		Bolts (Material)	:	Stainless Steel Captive Bolts
11	Nuts (Material)	:	Stainless Steel Captive Nuts				
	4. Finish						
12	Body (Material	:	Carbon Steel with Corrosion Resistant Paint				
	5. Others						
13	Features	:	Vapor Seal (Gas Stop)				
14		:	Test Cover (Test Plug for Testing)				
	5. Test & Inspection						
15	Dimension	:	Yes				
16	Empty Weight	:	VTA				

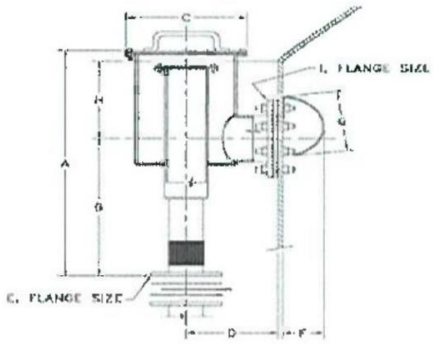

Remarks

VTA : Vendor to Advice

Note :
1. The foam system assembly shall be as per NFPA 11
2. Vendor shall provide a list of recommendation spare parts for two (2) years of operation and maintenance
3. Vendor shall provide Foam Chamber with 5 years product warranty
4. Vendor shall provide Gasket
5. As per minimum capacity of the selected size of Foam Chamber